Vector Saw Diagram

Eagle Rock Products

Dimensions, Power, Installation items

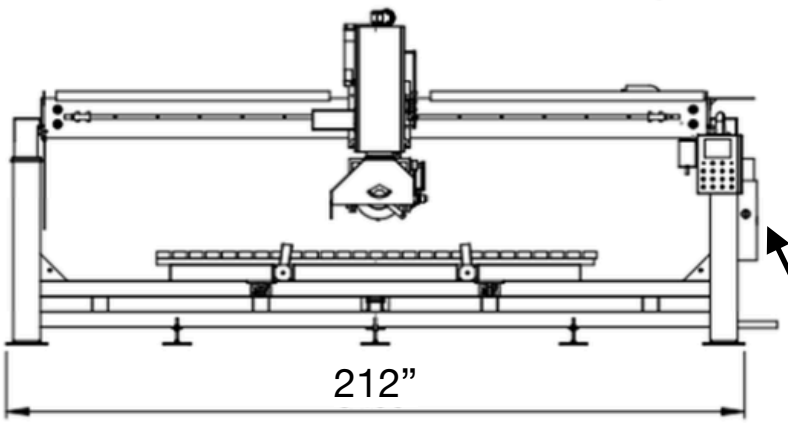

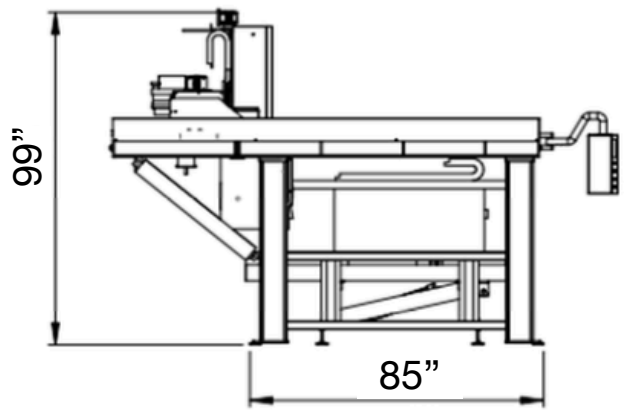

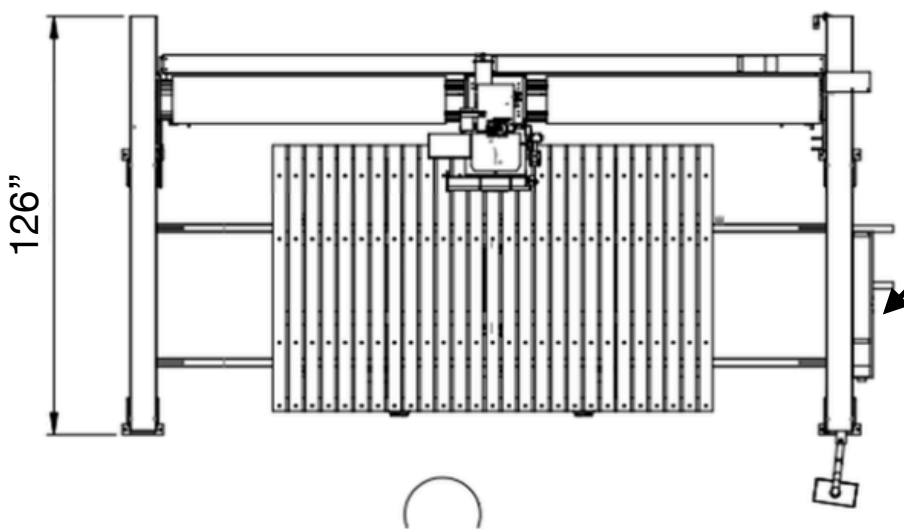

Electrical Box Location
- 100 amp breaker
- 220 Volts
- #3 AWG copper wire for connection

Weight: 7,945 lbs

Width without rear Y axis wings for shipping is 85”

Vector2 air pressure for vacuum
1 hp, 8 bar, 1.75 cfm

Water pressure required
50 - 70 psi

Hydraulic Fluid required
#68. (AW-68 from Napa)
- 5 gallons for the hydraulic tank
- 1.5 gallons for the main saw beam